状態変数型正弦波発生回路（State Variable Oscillator）

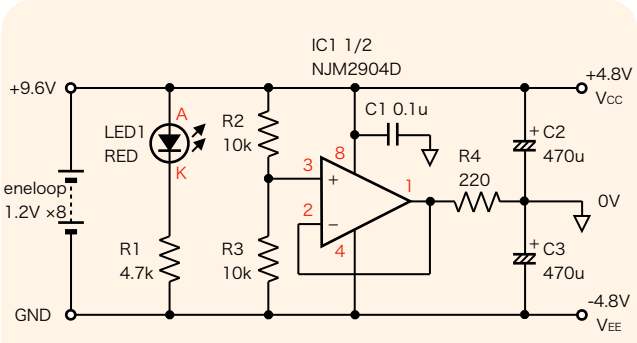

電源回路

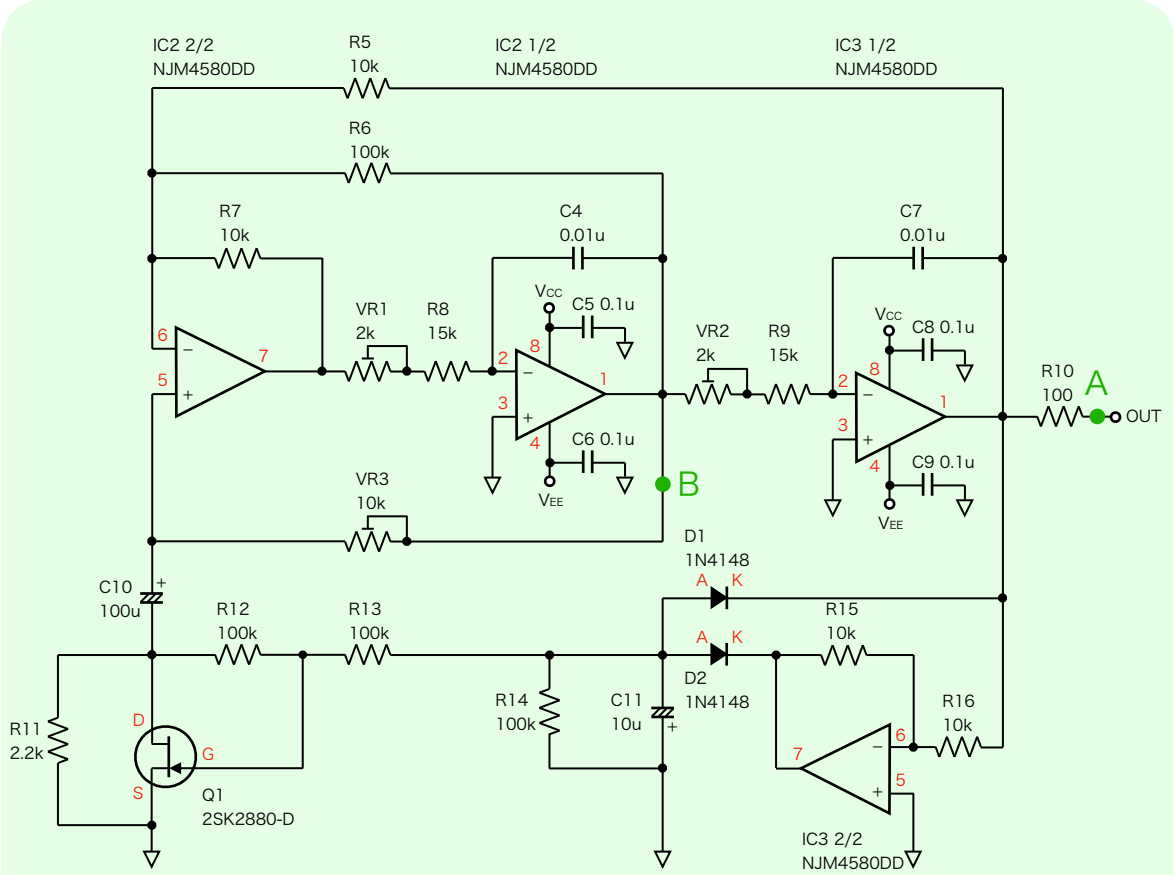

R = VR1+R8 = VR2+R9 = 15,915Ω, C = C4 = C7 = 0.01uF, R5 = R7

F = 1/(2πCR) = 1/(2π×0.01u×15,915) = 1,000Hz

C = 1000pF : 10kHz

C = 0.1uF : 100Hz

状態変数型正弦波発生回路